HSF

RoHS

Pos.	Dim. A	Dim. B	Dim. C
6	11.40	5.00	4.00
8	13.40	7.00	6.00
10	15.40	9.00	8.00
12	17.40	11.00	10.00
14	19.40	13.00	12.00
16	21.40	15.00	14.00
18	23.40	17.00	16.00
20	25.40	19.00	18.00
22	27.40	21.00	20.00
24	29.40	23.00	22.00
26	31.40	25.00	24.00
28	33.40	27.00	26.00
30	35.40	29.00	28.00
32	37.40	31.00	30.00

Pos.	Dim. A	Dim. B	Dim. C
34	39.40	33.00	32.00
36	41.40	35.00	34.00
38	43.40	37.00	36.00
40	45.40	39.00	38.00
44	49.40	43.00	42.00
48	53.40	47.00	46.00
50	55.40	49.00	48.00
54	59.40	53.00	52.00
56	61.40	55.00	54.00
60	65.40	59.00	58.00
62	67.40	61.00	60.00
64	69.40	63.00	62.00
68	73.40	67.00	66.00
80	85.40	79.00	78.00

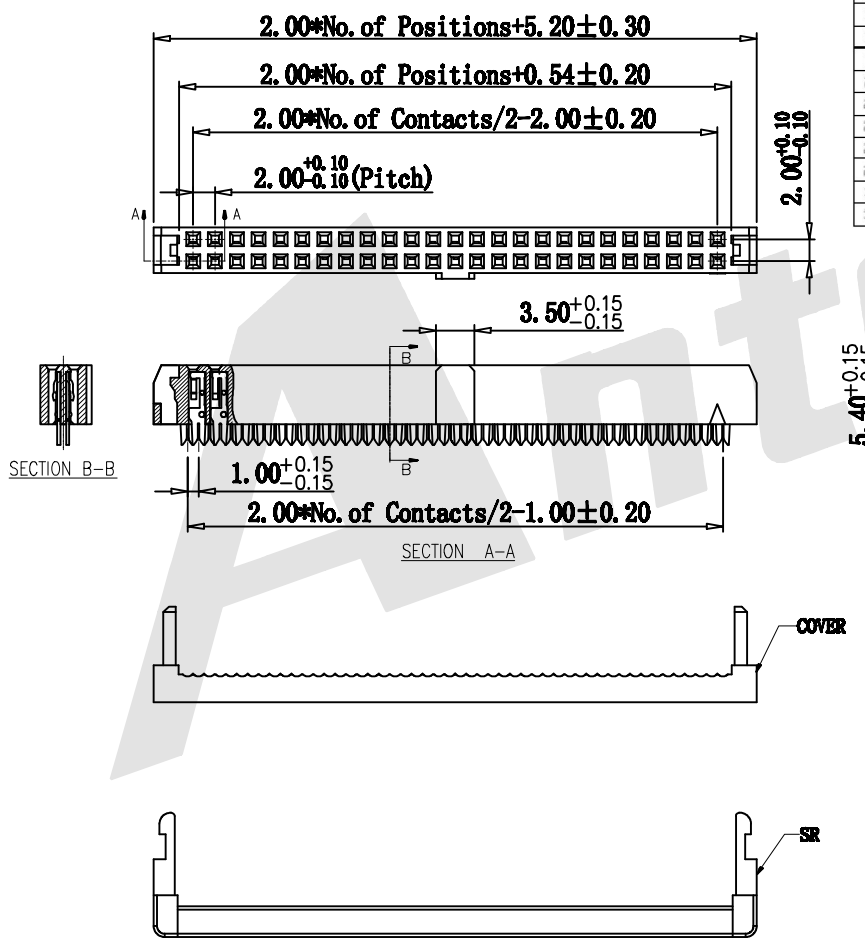

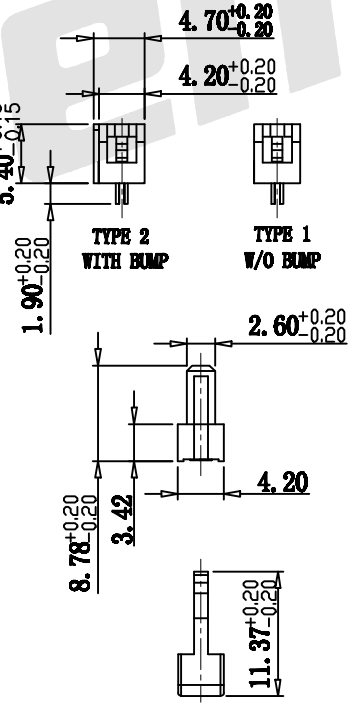

SPECIFICATION

Current Rating:	1.0Amp
Insulation Resistance:	1000MΩ min
Contact Resistance:	20MΩ max
Withstand Voltage:	500V AC/DC
Operating Temperature:	-40° C to +105° C
Contact Material:	Phosphor Bronze
Contact Plating:	Au Over Ni
Insulator Material:	PBT+30%GF UL 94V-0

Ordering Code:

FCCS02- X - X - X - X - X - X

① ② ③ ④ ⑤ ⑥ ⑦

①Series No:

②No. of Contacts
06P 08P 10P 12P
14P 16P 18P 20P
22P 24P 26P 28P
30P 32P 34P 36P
38P 40P 44P 48P
50P 54P 56P 60P
62P 64P 68P 80P

③Contact Plating
G0: Gold flash
G1: 3u" Gold
G2: 5u" Gold
G3: 10u" Gold
G4: 15u" Gold
G5: 30u" Gold
SN: Tin
S0: Gold flash/Ni
S1: 3u" Gold/Ni
S2: 5u" Gold/Ni
S3: 10u" Gold/Ni
S4: 15u" Gold/Ni
S5: 30u" Gold/Ni

④Color Insulator
B:Black
G:Grey

⑤ Packing
A:Tray
B:Bag
C:Tube
D:Tape Reel

⑥ With Strain relief or not
A: With strain relief
B: without strain relief

⑦ Bump Option:
A: TYPE 1,W/O BUMP
B: TYPE 2,WITH BUMP

REV	DESCRIPTION	DATE

Unless Otherwise specified tolerance
X.±0.35 X.XX:±0.20
X.X:±0.25 X.XXX:±0.15

SCALE: As Shown	UNIT: mm
DRAW Gong Feng	DATE 08/03/2017
CHECK BobYang	DATE 08/03/2017

3rd ANGLE PROJECTION

ANTENK ELECTRONICS CO,.LTD
Http://www.antenk.com
E-mail:sales@antenk.com

TITLE: 2.00mm IDC Socket + SR

DRAWING NO: FCCS02-XXXXX

PRODUCT NO: FCCS02-XXXXX